ADVANCE TABCO
SMART FABRICATION™

STAINLESS STEEL

HAND SINKS

A.D.A COMPLIANT LAVATORIES

Conforms To NSF 61/9 Lead Free Requirements



7-PS-25



7-PS-75



7-PS-751



7-PS-26

Item #:_____ **Qty #:**_____

Model #:_____

Project #:_____

FEATURES:

One piece **Deep Drawn** sink bowl design.

Sink bowl is 16" x 14" x 5".

All sink bowls have a large liberal radii with a minimum dimension of 2" and are rectangular in design for increased capacity.

1 1/2" stainless steel drain with crumb basket.

Additional Specific Features:

7-PS-25 6" Extended deck mounted gooseneck faucet with wrist handles & deck mounted liquid soap dispenser.

7-PS-26 includes a "Hands Free" AC/DC operated gooseneck faucet & deck mounted, liquid soap dispenser.

7-PS-75 Sink Only with three 1-3/8"dia. holes punched. Faucet & Soap Dispenser not included.

7-PS-751 Sink Only with single Hole punched. Faucet & Soap Dispenser not included.

CONSTRUCTION:

All TIG welded.
Welded areas blended to match adjacent surfaces and to a satin finish.
Die formed Countertop Edge with a 3/8" No-Drip offset.
Bowl made from One sheet of stainless steel - No Seams.

MATERIAL:

Heavy gauge type 304 series stainless steel.
Wall mounting bracket is Galvanized and of offset design.
All fittings are brass / chrome plated unless otherwise indicated.

MECHANICAL:

Faucet supply is 1/2" IPS male thread hot and cold.
Faucet Flow Rate: 1.0 GPM/3.8 LPM aerator. 60 PSI.

TAPERED BOWL DESIGNS AVAILABLE

Click Here For Spec Sheet!



7-PS-41



7-PS-77E

OPTIONS & ACCESSORIES



Electronic Soap Dispenser
Wall Mounted.
A/C or Battery Powered.
Includes Bracket & Hardware.
Uses Liquid Soap.
7-PS-12E



8" O.C.

Heavy Duty 5-1/2" Gooseneck Faucet
K-132



Drinking Bubbler For 7-PS-25, 7-PS-26 & 7-PS-75
K-47



8" O.C.

Heavy Duty 9" Swing Spout Faucet
K-133



Strainer Plate for K-63 2" Drain
K-411

⚠ WARNING:

Equipment that includes a faucet may expose you to chemicals, including lead, that are known to the State of California to cause cancer or birth defects or other reproductive harm. For more Info.,visit www.p65warnings.ca.gov.

ADVANCE TABCO
SMART FABRICATION™
www.advancetabco.com

Customer Service Available To Assist You 1-800-645-3166 8:30 am - 7:00 pm E.S.T.

For Orders & Customer Service:
Email: customer@advancetabco.com or Fax: 631-242-6900

For Smart Fabrication™ Quotes:
Email: smartfab@advancetabco.com or Fax: 631-586-2933

DIMENSIONS and SPECIFICATIONS

TOL Overall: ± .500" Interior: ± .250" **FITTINGS SUPPLIED AS SHOWN** **ALL DIMENSIONS ARE TYPICAL**

7-PS-25

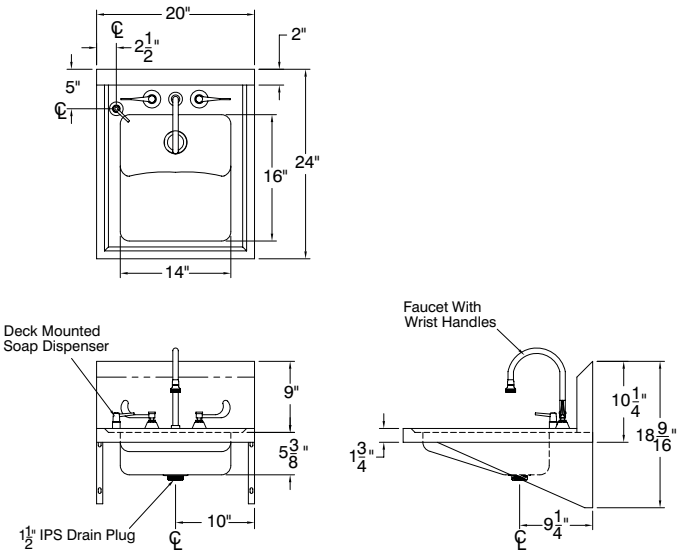

Approx. Ship Wt. 25 lbs.

7-PS-26

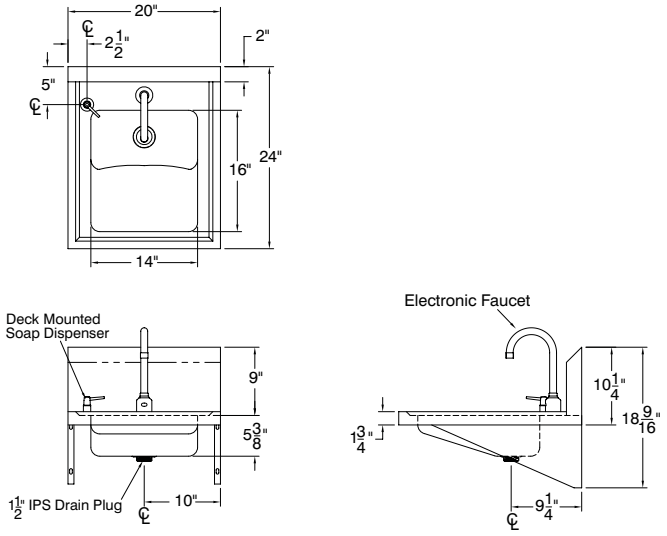

Approx. Ship Wt. 25 lbs.

7-PS-75

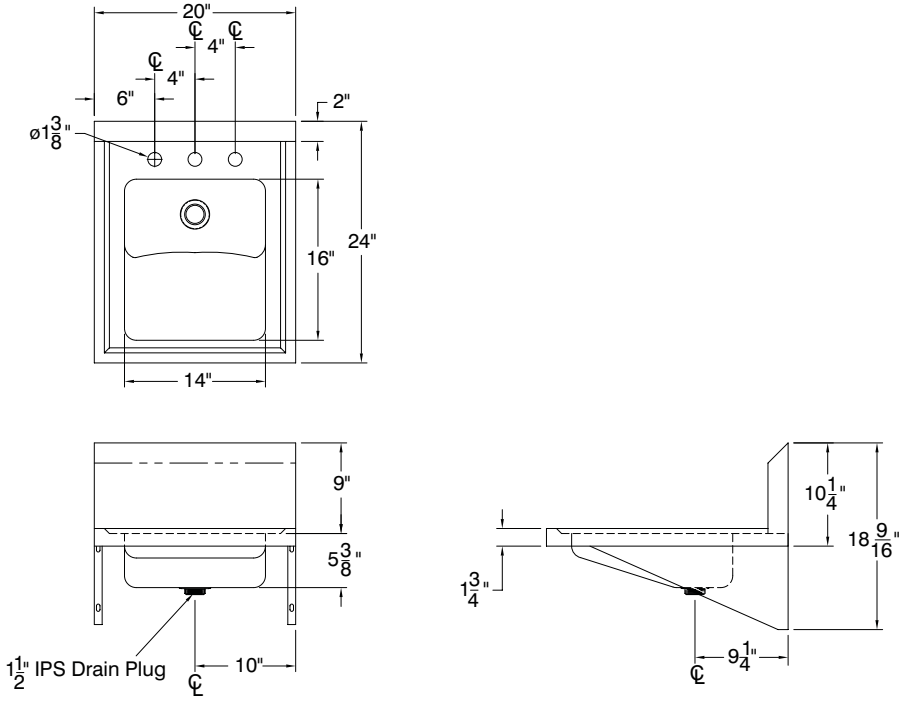

Approx. Ship Wt. 25 lbs.

ADVANCE TABCO
SMART FABRICATION™

ADVANCE TABCO is constantly engaged in a program of improving our products. Therefore, we reserve the right to change specifications without prior notice.

325 Wireless Boulevard, Hauppauge, NY 11788
© ADVANCE TABCO, OCTOBER 2026